Research and development of membrane filtration technology in Norway

Av Hallvard Ødegaard

Hallvard Ødegaard er professor ved
Norwegian University of Science and Technology

Innlegg på seminar 30. september 2002

Abstract. In Norway we have been doing research on membranes for water treatment since the mid 1970'ies. Until recently the research and development has primarily been directed towards the removal of humic substances (NOM) in drinking water. Since 1990 around 100 membrane plants (most of them small) have been installed based on nanofiltration membranes in crossflow spiral-wound modules. During the recent years, several other membrane- and module configurations have been investigated, such as coagulation/-membrane filtration in spiral-wound nanofiltration membranes, hollow fibre ultrafiltration membranes and sintered metal microfiltration membranes as well as ozonation/membrane biofiltration in a rotating disc ultrafiltration membrane system. We have also started work on the use of membranes for advanced wastewater treatment. This paper gives a short review of the development of the technology for the use of membranes in water treatment in Norway

Key words: Membrane filtration, NOM-removal, coagulation/ultrafiltration, rotating disc membrane reachtor, metal membrane.

Introduction

The use of membrane for water treatment in Norway has been closely linked to the removal of humic substances, often also referred to as natural organic matter (NOM). Norway has a lot of water. We can avoid using polluted water courses as sources for drinking water. We cannot, however, avoid the fact that a large portion of the Norwegian fresh water contains a fairly high amount of NOM that gives the water a yellow-brownish colour.

A research and development programme was launched in the beginning of the late 1970'ies in which various processes for the removal of humic substances were analysed, such as coagulation/direct filtration, ion exchange, activated carbon adsorption and membrane filtration. This was really the early days for membrane filtration for water treatment and mem-

brane filtration was primarily identified as reverse osmosis for desalination. It is typical that when we wrote our first international publication based on the work started in 1997 by my first PhD-student Supporn Koottatep (now professor in Chiangmai, Thailand), we gave it the title: Removal of humic substances from water by reverse osmosis (Ødegaard and Koottatep, 1982). Obviously we did not run reverse osmosis membranes, because our idea was to achieve far lower trans-membrane pressures by utilizing far more open membranes (which we today probably would call nano- or ultrafiltration membranes) in order to separate directly the large humic molecules. Our collegae, Thor Thorsen at SINTEF had good contact with membrane manufacturers and made them provide us with membranes in the nano- and ultrafiltration range.

This early work lead to comprehensive research project on fouling control during the 1980'ies (Ødegaard and Thorsen, 1989), that ended up in a full scale demonstration plant in Trondheim in 1990. From that moment on membrane filtration for humic substance removal gained momentum so that we today have around 100 plants for NOM-removal in Norway. Below we shall briefly discuss how these plants are designed ("the Norwegian way").

In the mid 90'ies we also started to address the use of membranes for particle removal – both for drinking water treatment (i.e. after coagulation) and for wastewater treatment (particularly for separation of excess biofilm from the moving bed biofilm reactor). We have also addressed the use of membranes for gas injection/degassing in water. These were more recent works very much inspired by our contact with Japanese research groups and companies.

Removal of NOM by membrane filtration

There are several reasons for the need to remove humic substances in water that is to be used for drinking water supply; aesthetic and organoleptic reasons (colour, taste and odour), health related reasons (for instance the formation of carcinogenic and mutagenic chlorinated by-products) and practical/economical reasons (Ødegaard (ed), 1999).

The presence of humic substances represents a big challenge in the Norwegian water supply. About 1/3 of all the drinking water sources have too high NOM-content, that have to be reduced in order to comply with the drinking water quality standards. The typical Norwegian humic removal plant, treat lake water low in turbidity (< 1 NTU), alkalinity (< 0.5 mequiv/l) and hardness (< 5 mg Ca/l) and high in colour (30-80 mg Pt/l) and TOC (3-6 mg C/l). The Norwegian water quality standards require colour < 20 mg Pt/l, TOC < 5 mg TOC/l and haloform formation as low as possible (TTHM < 50 µg/l).

There are principally two ways by which one may use membrane filtration for removal of humic substances

- By direct separation of the humic molecules
- By coagulation first and then separation of the coagulated NOM

In the late 70'ies our research group decided to investigate the feasibility of direct membrane filtration as the only treatment for typical Norwegian humic water. Early testing took place in the period from 1978 to1984 (Ødegaard and Koottatep, 1982), followed by practical development especially on choice of membrane type and membrane fouling (Ødegaard and Thorsen, 1989) since fouling was obviously the main challenge in this direct filtration strategy. This research lead, however, to a Norwegian way of doing it – "the Norwegian way" - that will be explained below. Since 1990 an increasing number of plants have been installed more or less according to the same design philosophy and currently there are close to 100 plants in operation. This represents about 40 % of the total number of plants specifically designed for NOM-removal in the country. Most of them are quite small, with 59 % of the plants producing < 500 m^3/d and 40% of the plants in 500-5000 m^3/d range. The largest one is designed for 16000 m^3/d.

Removal of NOM "the Norwegian way"

The typical flow diagram of a membrane filtration plant in Norway is shown in Figure 1. The raw water passes first through a pre-treatment unit, normally a micro-sieve with a sieve opening of 50 µm. If the turbidity is high (1-10 NTU), a rapid sand filter is recommended instead of the sieve.

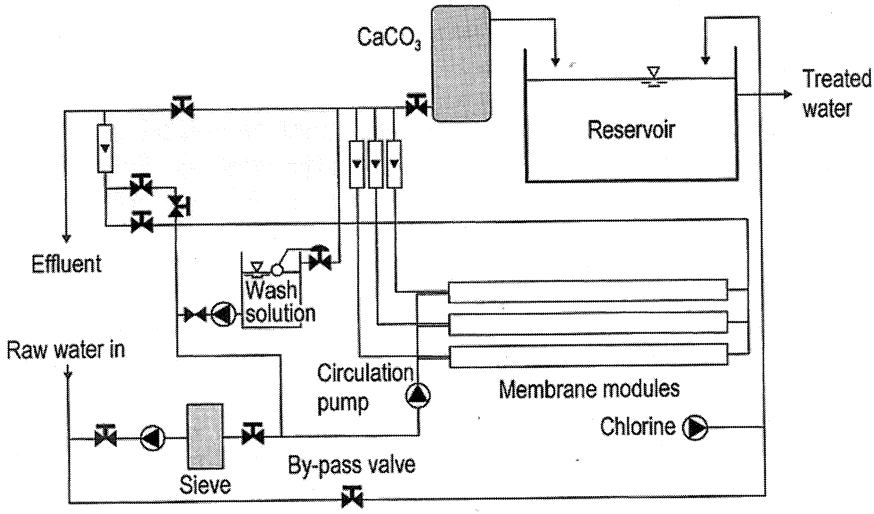

Fig. 1 Typical design of a membrane filtration plant for humic substance removal

After pre-treatment, the pressure is raised up to the operating pressure of the membrane unit by a circulation pump. Cross-flow filtration takes place in the membrane unit resulting in a clean water stream (the permeate) that has passed through the membrane and a dirty water stream (the concentrate) that passes a reduction valve bringing the concentrate back to atmospheric pressure. Some of the concentrate is recycled to the inlet in order to increase the recovery.

Since the reduction of calcium and bicarbonate concentration through the membrane filter is about 15-30 %, a calcium carbonate filter is normally added in order to replace removed ions and increase calcium, alkalinity and pH for corrosion control purposes. The membrane-filtered water is normally chlorinated or UV-irradiated for disinfection. In several cases the water source is situated so high above the supply system (for instance 50-100 m) that the static pressure can be used, resulting in considerably reduced energy cost.

Pre-treatment

Even though the turbidity of Norwegian lake water is quite low, it turns out that the pre-treatment is very important. Typically automatic back-flushing micro-sieves are being used with a pore size of 50 µm. It has been experienced that the sieves in several plants have been under-designed with respect to hydraulic capacity (peak-loads). In some instances gel-coated crustaceans have caused clogging of the sieves, in particular mesh sieves. For some cases installation of an additional slotted sieve has been found necessary.

Choice of membranes and membrane modules

All the Norwegian plants are based on spiral wound membrane modules and the majority on cellulose acetate (CA) membranes with a few exceptions based on polyamide. They have a pore size in the range of 1.5 to 5 nm (1 to 20 kD). Cellulose acetate membranes have been preferred because they are highly hydrophilic, the price is relatively low and so is the tendency to fouling. The fouling layer on such membranes loosens relatively easily upon membrane cleaning as well. Correct selection of chemical cleaning solutions is critical, however, as CA-membranes are not compatible with strong cleaning agents and high temperatures (pH: 2-9, Cl_2: 20 mg/l, temperature: < 35 °C).

The typical operating pressure is 3-5 bar. At a pressure drop along the membrane of 0.2-0.8 bar per m, there are limits to how long a row of membranes may be before the pressure loss along the membrane has to be compensated for. Typically, a membrane row of up to 6 m is used before pressure increase is implemented. The operating pressure is strongly dependent upon the temperature. A pressure increase of 2.2 % per °C is required for CA membrane units. Norwegian water sources may have temperature variations from 0-2 oC in winter to 14-18 °C in summer, and the plants must therefore be designed for winter conditions (Ødegaard et al , 2000).

Treatment efficiency and recovery

Coloured surface water contains NOM with a broad range of molecular sizes (0.1 – 100 nm) and molecular weights. Membranes have a certain cut-off related to the molecular size of the solutes, and the treatment efficiency is therefore primarily depending on the pore size of the membrane. The most suitable membrane pore size in a given situation is the one that removes the desired amount of target compounds. In Figure 2 the rejection for four common drinking water parameters relevant to coloured Norwegian surface water is shown (Thorsen and Bergan, 1990).

Figure 2 demonstrates that more than 80 % of the colour in typical Norwegian humic water was rejected at nominal pore sizes less than 5 nm. Colour is rejected to a larger extent than TOC as colour is associated with the higher MW-fraction of TOC. Mn is an ion in true solution and demands tight membranes in order to be removed, whereas Fe is normally found in a colloid hydroxide state and is therefore better rejected. In our soft waters it is favourably that only about 20-30 % of Ca is rejected at the typical 1.5-5 nm pore size.

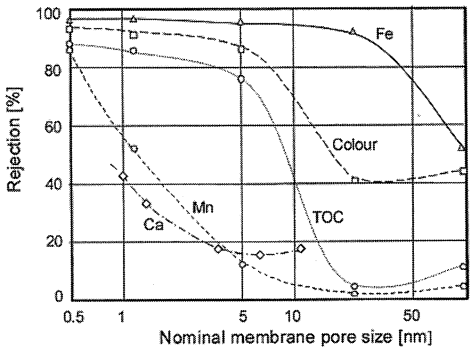

Fig. 2 Rejection of different common parameters in surface water (Thorsen and Bergan, 1990)

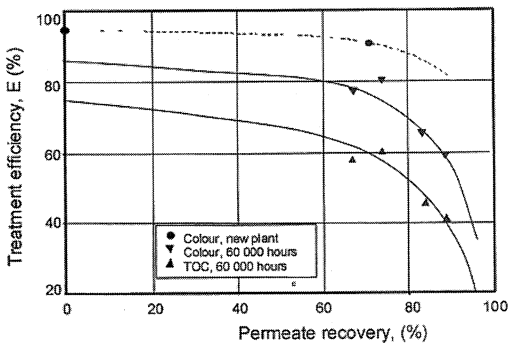

Fig. 3 Influence of recovery on rejection and treatment efficiency (Thorsen, 1998)

The treatment efficiency of such a plant will always be lower than the rejection and will be dependent on recovery which is the ratio between the total amount of permeate (produced water) to that of the raw water supplied. The treatment efficiency will decrease with increasing recovery for a given rejection. This is demonstrated in Figure 3 giving data points from a full-scale operation. The curve lines are based on model calculations (Thorsen, 1998). Recoveries above 80-85 % will reduce efficiency significantly and therefore most of the Norwegian plants are operated at typical recoveries of 70-80 % and removal efficiencies of 75-80 % for colour and 60-70 % for TOC.

The higher the raw water colour, the lower pore diameter is chosen in order to be able to achieve the required colour in the treated water. However, tighter membranes increase the rejection of di- and trivalent ions (like Fe, Al and Ca) which influence the colloidal stability of the humics and causes coagulation. Increased concentration of both humic substances and such ions at the membrane surface may promote membrane fouling and reduced permeability (Thorsen, 1999). There is a balance, therefore, between efficiency and cost as the tighter membranes obviously require higher operating pressures and give lower production capacity. Taking all factors into consideration, a membrane pore size of 1.5 - 5 nm has been found to be in the optimal range.

Membrane flux

In theory, membrane flux (l/m^2. h) is proportional to the operating pressure. This is influenced by fouling, however, and if one is operating at a flux over a certain level (the critical flux), the negative effect of the fouling layer will be dominant over the expected flux increase at higher operating pressure, with reduced flux at increasing pressure as the ultimate result. This is not discovered at the start of operation, only after 500-1000 hrs. It is, therefore, very important that one does not design for a flux too high, even though pilot tests may have indicated that high fluxes might give acceptable results.

In the early days, the plants were designed for membrane fluxes around 20 l/m^2h. Now it has been realised that the maximum long term operating flux for typical Norwegian conditions should not be set higher than 12-18 l/m^2h, depending on raw water characteristics, recovery aimed for, cleaning frequency, type of cleaning solution etc. In most of the small plants a fraction of the concentrate is recirculated to the inlet in order to increase the cross-flow velocity along the membrane and reduce the formation of the fouling layer. In order to be able to operate at typical rejections between 80 and 85 %, the flow rate in cross-flow operation should be in the range of 5-10 m^3/h in a standard 8" spiral module. In the larger plants, the modules are often divided into several sections in series, with a booster pump between each section. This complicates the plant but results in better treatment efficiency and less fouling layer formation. The flux has little influence on treatment efficiency, but the water characteristics have a pro-

nounced effect. Generally it appears that waters with a high colour/TOC-ratio give a high rejection of TOC.

Membrane fouling and cleaning

In theory, membrane flux (l/m^2. h) is proportional to the operating pressure. This is influenced by fouling however Membrane fouling with flux decline represents the greatest challenge in membrane filtration of humic substances. Adequate cleaning of the membranes has turned out to be crucial both for capacity and lifetime. The plants are designed, however, for a membrane lifetime of 5 years but there are experiences with plants with as old membranes as 10 years.

In most of the plants two types of cleaning are normally carried out; (1) a frequent (daily) cleaning and (2) a main cleaning that is carried out a couple of times a year. In the daily cleaning, that normally lasts for about one hour and takes place during night, a chemical cleaning solution containing a mixture of cleaning agents and chlorine is pumped into the membrane module and circulated for 30-60 minutes after which it is discharged. The membrane module is then rinsed for 10-20 minutes with raw water, and permeate is lead to waste. During this procedure the plant it out of production but is put back into operation after rinsing is finished. A typical cleaning solution used for daily wash is a weak alkaline solution (30-60 weight-% organic salts, 0-1 % tensides and 40-70 % water) that is diluted and mixed with a chlorine solution before use. The amount of chlorine added is equivalent to a concentration of 20 mg/l on average in the circulating water. The purpose of the chlorine is to avoid bacterial colonies establishing themselves inside the plant.

The main cleaning is typically carried out by the contractor 1-2 times per year at the plant, as part of a service agreement. It lasts for 8-24 hrs depending on local circumstances. The cleaning solution is introduced to the plant and circulated on the feed side of the membrane. Half way in the cleaning procedure, the solution is washed out and a new portion introduced. After some time raw water is fed to the plant, and the cleaning solution is washed out partly through the concentrate and partly to the permeate - both to waste. After sufficient rinsing by letting the permeate go to waste, the plant is again put into operation at gradually increasing pressure. A typical cleaning solution used for the yearly wash is a weak alkaline solution containing 30-60 % EDTA, 30-60 % phosphate, 10-30 % sodium sulphate, < 1 % enzymes, 5-10 % anionic tensides and 1-5 % non-ionic tensides used in a 1 % solution (all weight-%). The actual composition of the cleaning solutions is proprietary information.

Disposal of wastes from membrane filtration plants for NOM removal

From a membrane filtration plant for humic substance removal, one will have to dispose of the concentrate as well as the various cleaning solutions and rinsing water. Generally, Norwegian water pollution control

authorities consider that the concentrate and cleaning water do not represent any pollution hazard when they are discharged to the water source down-stream the water intake.

This was also established as a fact through an investigation (Ødegaard et al, 2000) where it was demonstrated that haloform formation was very low and had no impact in filtered water and little impact on the concentrate.

Survey of operating experiences

During the spring of 1999 a survey among 27 plant owners of NOM removal plants in Norway was conducted. Some of the results are summarized in Table 1. Generally the survey demonstrated that the plant owners of the membrane filtration plants were quite satisfied with their plants and much more satisfied than the owners of other types of NOM-removal plants (coagulation/direct filtration, ion exchange etc)(Ødegaard et al, 2000). The treatment results were generally very satisfying and in accordance with plant design and specifications. It is a fact, though, that more than 40 % of the plants had experienced total operational breakdown one or several times, an indication of the fact that plants that are totally automised are susceptible to breakdown because of power failure etc.

TABLE 1 A summary of operational experiences from 27 membrane plants for NOM removal

Average colour removal efficiency (21)[1] :	86±15 %[2]
Final colour < 5 mg Pt/l	57 %
Final colour 5-10 mg Pt/l	33 %
Final colour 10-20 mg Pt/l	10 %
Percentage of plant owners disagreeing with the statement (27)[1] :	
a. Total operational break-down has never occurred	41 %
b. No problems in maintaining capacity over time	22 %
c. No problems with pre-treatment	15 %
d. Process is insensitive to raw water quality changes	15 %
e. Start-up of process was smooth and rapid	8 %
f. Process simple to run - requires little surveillance	4 %
g. Plant gives good and stable treated water quality	4 %
h. Operation cost is acceptable	4 %

( )[1] Number of plants giving information on this question [2] Raw water colour : 35-50 mg Pt/l

Removal of NOM by coagulation/membrane filtration

Over the last few years our department has also taken up NOM-removal by coagulation/ultra membrane filtration. The experiments are carried on highly coloured raw water (50 mg Pt/l) by coagulation and outside-in hollow-fibre membrane filtration. Chitosan, a cationic biopolymer produced from crustacean shells, and polyaluminium chloride (PACl) have been used as coagulants. The rate of permeability decline was determined for different backwash frequencies and different fluxes at a 95% water recovery of the membrane (Machenbach et al., 2002).

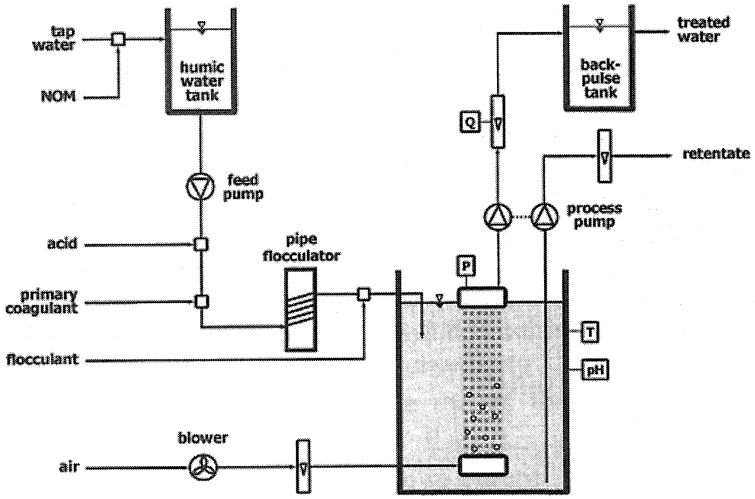

Figure 6 The experimental set-up of the coagulation/ultrafiltration project

The experimental results so far show that coagulation with PACl gave a good and consistent permeate quality with removals of 95.6%, 84.9%, and 66.1% for true colour, UV absorbers, and dissolved organic carbon (DOC), respectively. Longer filtration intervals with less frequent backwashing as well as lower specific aluminium dosages increased the rate of permeability decline. The particle size distribution in the retentate tank was not affected by the frequency of backwashing.

Chitosan was less effective in coagulating humic substances and the removal efficiencies were notably lower. Preliminary results suggest that the permeability declines somewhat faster for chitosan compared to PACl-coagulated water.

At this time it is difficult to say whether coagulation/ultra membrane filtration will be able to compete economically with traditional nanofiltration of NOM ("the Norwegian way"), but it certainly is an interesting option.

In another project we have worked with sintered metal microfiltration membranes from Hitachi metals. In the pilot plant we have utilised the membranes in a cassette system, see Figure 7. The idea behind this project was to investigate the feasibility and potential of using inorganic metal microfiltration membranes in a submerged membrane configuration with coagulation pretreatment for drinking water production. Variations in operating modes and conditions were tested, from dead-end operation to semi sequencing batch operation using air scouring and backwashing cycles for membrane cleaning and fouling control. Fluxes around 180 LMH at transmembrane pressures below 0,3 bar where achieved over production cycles in excess of 50 hours.

Treatment efficiencies in general showed >95% color removal, ~85% UV removal, 65-75% TOC removal, >0.5 NTU turbidity and non-detectable suspended solids in the permeate. The initial results show that MF metal membranes combined coagulation pretreatment are a potential alternative to treating drinking water.

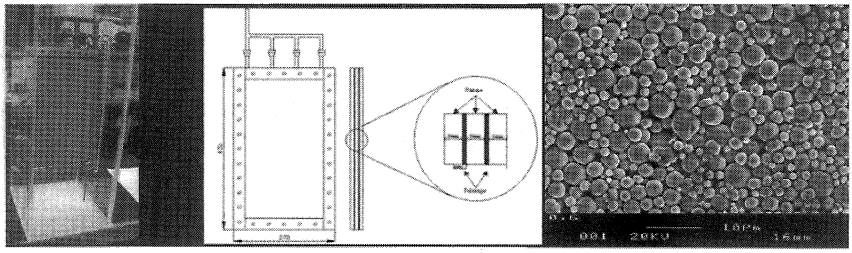

Figure 7 The Hitachi Metal membrane used in a cassette system

Removal of NOM by ozonation/membrane biofiltration

Another quite interesting alternative for NOM-removal is ozonation/biofiltration (Ødegaard, 1996, Melin and Ødegaard, 2000, 2002). In this method the non-biodegradable NOM is ozonated first in order to remove colour. This produces easily biodegradable organic matter (e.g. carboxylic acids, aldehydes and keto acids) that is subsequently biodegraded in a biofilter.

When working in Hokkaido university 3 years ago, I became inspired by the work carried out by Kimura (Kimura, 2000) on the use of the rotating biofilm membrane reactor that he used for ammonium removal. I though that this system also could be used for ozonation/biofiltration according to the principle shown in Figure 7.

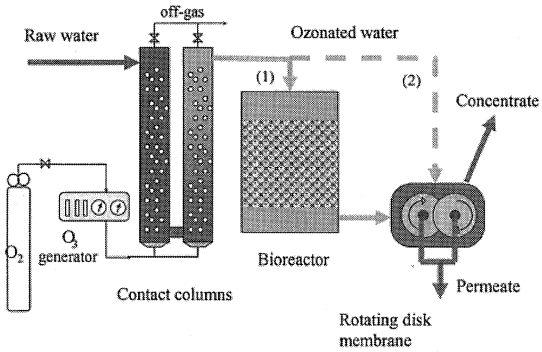

Figure 7. The principle of the ozonation/biofiltration/membrane system

The figure demonstrates two alternative routes for the ozonated water the rotating membrane disc reactor; a) via a biofilter or b) directly. It is the latter one that is most interesting. In this scheme we let biofilm establish itself on the membrane surface and we filter the water through the membrane. By control of the biofilm formation on the membrane surface by the procedure proposed by Kimura (by sponges placed in the reactor chamber), we believe that the TMP build-up will be relatively slow. The project is by far not finished and we we hope to produce interesting results in cooperation with Hitachi plant, Ltd.

Summary and conclusions

It is demonstrated in this paper that The Water Treatment Research Group at NTNU/SINTEF has had a long research history in the use of membrane filtration for water treatment.

We have been strongly inspired by Japanese colleagues and are actively involved in many innovative projects in this area of research.

References

Kimura, K. (2000) A novel biofilm-membrane reactor for advanced drinking water treatment. PhD-thesis. Hokkaido University. Sapporo, Japan

Melin, E. and Ødegaard H. (2000) The effect of biofilter loading rate on the removal of organic ozonation by-products. *Wat. Res.* Vol. 34, No. 18, pp 4464-4476, 2000

Melin, E., Eikebrokk, B., Brugger, M., Ødegaard, H.: "Treatment of Humic Surface Water at Cold Temperatures by Ozonation and Biofiltration" Proc. IWA 3'rd World Water Congress, Melbourne, Australia, 7-12 April 2002

Machenbach, I., Leiknes, T.O., Ødegaard, H. (2002) Coagulation/-submerged hollo-fibre ultrafiltration for NOM removal Proc. Int. IWA/AWWA/JWWA/EDS. Conf. on Membranes in drinling and industrial water production, Mühlheim/Ruhr, Germany, Sept 22-26

Thorsen, T. (1998) Flux and recovery influences on treatment efficiency in ultrafiltration of coloured drinking water. *Desalination* 117, pp 131-138

Thorsen, T. (1999) Fundamental studies of membrane filtration of humic substances. Doctoral disseration under preparation.Norwegian University of Science and Technology (NTNU), Trondheim, Norway

Thorsen, T. and Bergan. E. (1990) Membrane filtration for drinking water treatment – The significance of pore size for treatment efficiency. SINTEF-Report No STF 21A90100, Trondheim, Norway (In Norwegian)

Thorsen, T., Harz, A. and Ødegaard, H. (1997) Influence of raw water characteristics and membrane pore size on the performance of ultrafilters for NOM (humic substances) removal. Proc. 21'st Int. Water Supply Congress & Exhibition, Madrid 20-26. Sept. 1997

Ødegaard, H. and Koottatep, S.: Removal of Humic Substances from Natural Waters by Reverse Osmosis. *WaterResearch*, Vol. 16, pp. 613-620, 1982.

Ødegaard, H. and Thorsen, T. (1989) Removal of humic substances

by membrane processes. Chapter 42 in: Suffet and MacCarthy: *Aquatic Humic Substances. Influence on fate and Treatment of Pollutants*. Advances in Chemistry Series 219, American Chemical Society, pp 769-782.

Ødegaard, H. (1996) The Development of an Ozonation/Biofiltration Process for the Removal of Humic Substances. In: *Advances in Slow Sand and Alternative Biological Filtration,* N. Graham and R. Collins (eds.), John Wiley & Sons, pp. 39-49.

Ødegaard, H, Eikebrokk, B. and Storhaug, R..:"Processes for the removal of humic substances from water - An overview based on Norwegian experiences" Wat. Sci. Tech. Vol 40(9), pp 37-46, 1999

Ødegaard, H, Thorsen, T, Melin, E (2000) Practical experiences from membrane filtration plants for humic substance removal". Wat.Sci.Tech., Vol. 41, No. 10-11, pp. 33-41, Aug 2000.